YAESU OPTOCAT and PABUFF

Safe RS232 interface and PA buffer for Yaesu FT8x7 and FT100

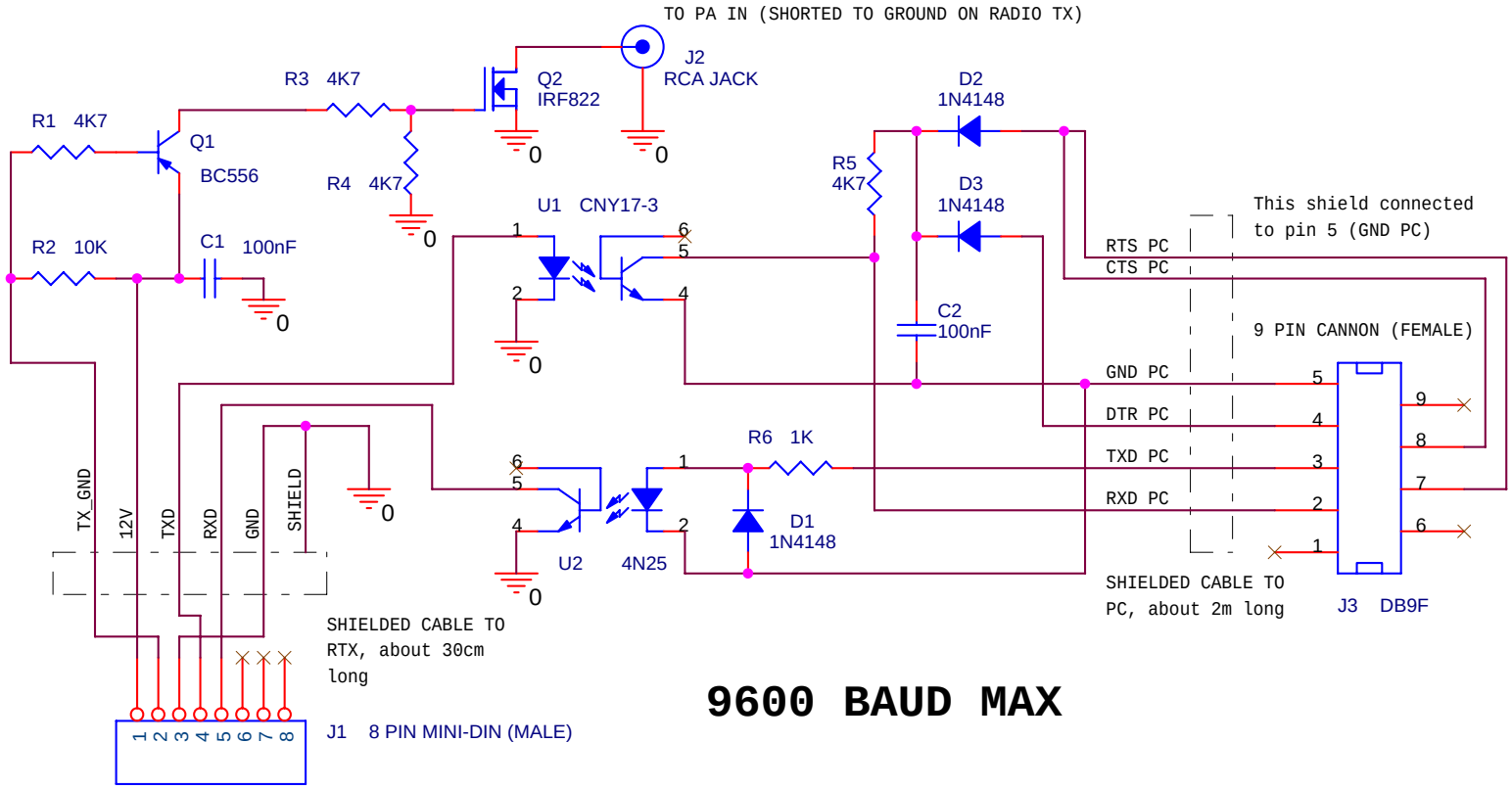

9600 BAUD MAX

Title	YAESU FT8x7 OPTOCAT and PA Buffer by IK2BCP	
Size A	Document Number	Rev 1.1
Date: Tuesday, October 04, 2005	Sheet 1 of 1	