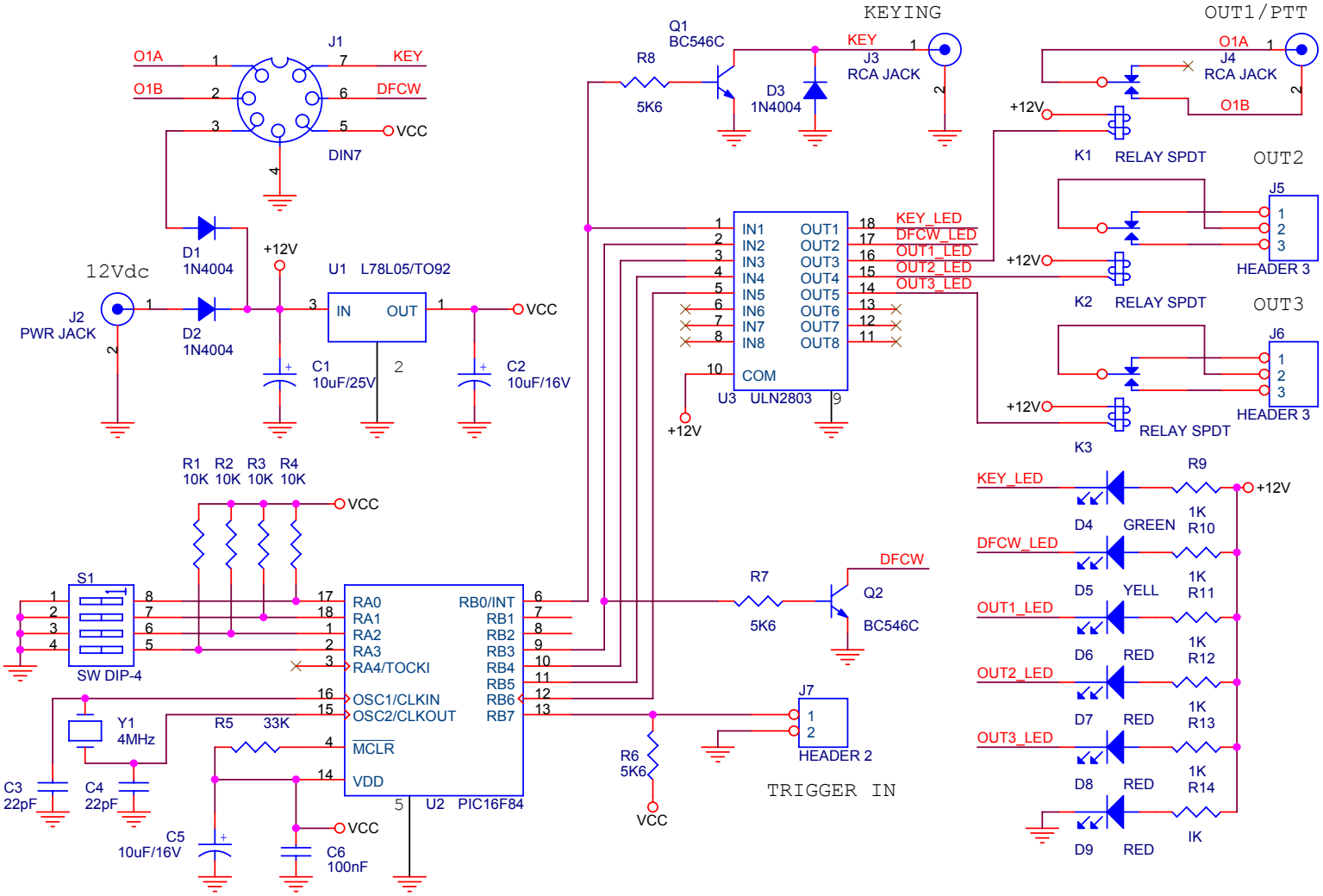PICBeacon2 - CW, QRSS and DFCW beacon by IK2BCP